GAMING PC GT-U

Intel® Core™ Ultra 5-135H
Intel® Core™ Ultra 7-165H

HYSTOU®



Hystou Technology Co Limited

Focus on High-end X86 Mini Computers & Fanless PCs
10th Floor, Building A1, No. 52 Tongren Road,
Jiazitang Community, Fenghuang Street, Guangming District,
Shenzhen, CHINA 518000. www.hystou.com

Specification Ultra 5-135H/Ultra 7-165H

* Bios Setup/Boot Menu: Delete =>Bios Setup, F11 =>Boot Menu;
  BIOS: AMI（American Megatrends Inc）
* CPU Processor: Intel® Core™ Ultra 5-135H / Intel® Core™ Ultra 7-165H
* Cooling system/CPU fan DB（MAX）: air -cooled fan, 55dB
* Lithography: intel 4
* NPU: Intel® AI Boost 11 TOPS INT8 computing power,
supporting AI inference acceleration
* Memory slot: 2 × SO-DIMM DDR5, Max support 96GB（48G×2） RAM
* Storage: Main Hard Disk Interface (SSD2): M.2 2280, NVMe Gen4 x4
Secondary Hard Disk Interface (SSD1): M.2 2280, NVMe Gen3 x3
Supports (1 × 2.5" SATA III 7mm)
* Graphics: GeForce RTX 5050 OC Low Profile 8G
* Supported Systems: Windows 10/Windows 11, Linux
* Common Features: vPro® + AMT Remote Management
Power on automatically after AC power restoration, Wake on LAN (WOL)
Scheduled Power On / RTC Alarm Power On, Watchdog Timer, TPM 2.0
Keyboard & Mouse Wake-up from Sleep (requires connection to specific USB 2.0 ports)

Internal functions

* 1x Front panel header, used for connecting external switches,
reset buttons and LED indicators.
* 1x JCMOS header, used to restore CMOS default settings.



Others

* Rated Output: DC 19 V / 13.16 A（250 W）
* Rated Input: AC 100-240 V, 50/60 Hz
* Case Material: Aluminum Alloy
* Desktop bracket, place the desktop
* Motherboard: 195mm*185mm
* PC size: 222mm*193mm*73mm
* Net Weight: 1.6kg, Gross Weight: 2.6kg

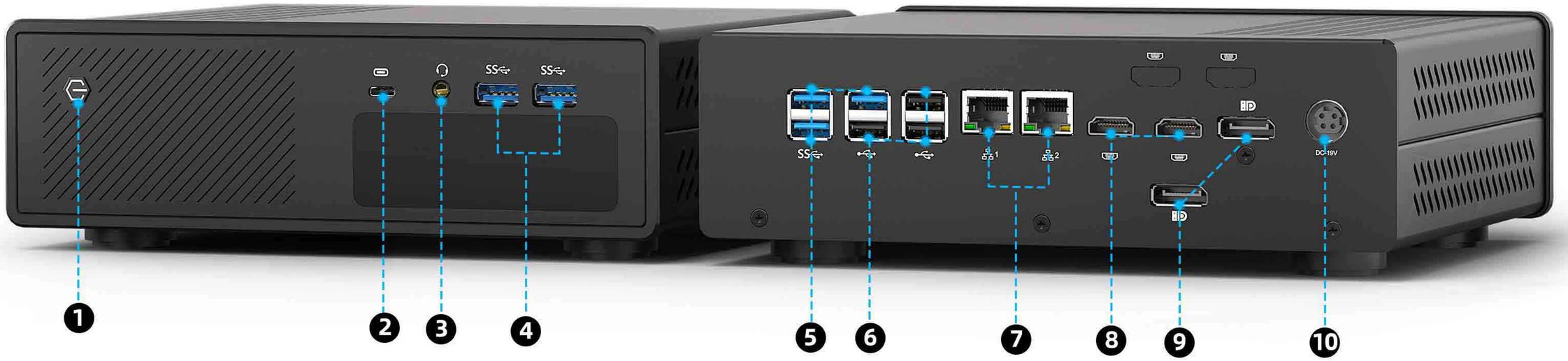

Input/Output Interfaces

1. 1 x Power On/Off Switch
2. 1 x Type-C
3. 1 x MIC/SPK
4. 2 x USB 3.2
5. 3 x USB 3.2
6. 3 x USB 2.0
7. 2 x RJ45 Lan Port
8. 2 x HDMI
9. 2 x DP
10. 1 x 19V DC in

Package Content

Standard:

*** 1 x Mini PC** *** 1 x Power Adapter**

*** 1 x Power Cord** *** 1 x User Manual**

*** 1 x SATA Cable** *** 1 x Screws Pack**

Optional:

*** HDMI cable, DP to HDMI cable.**

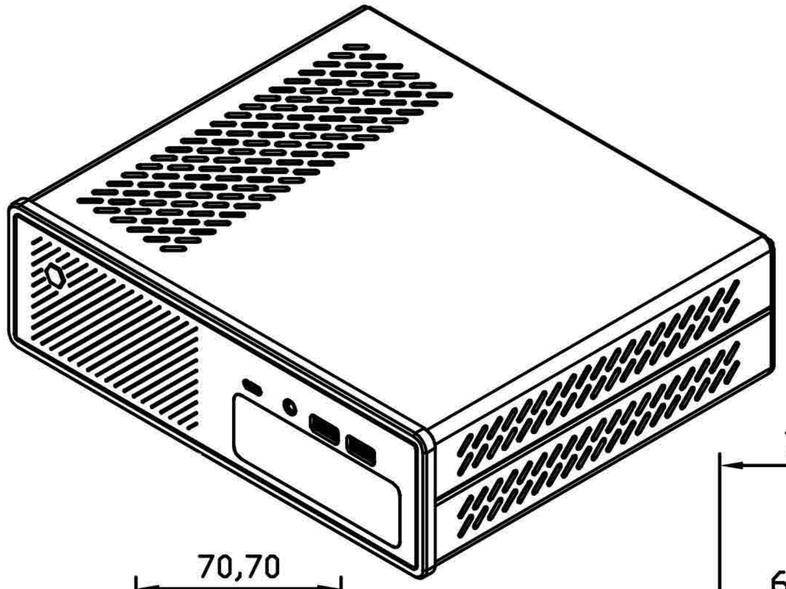

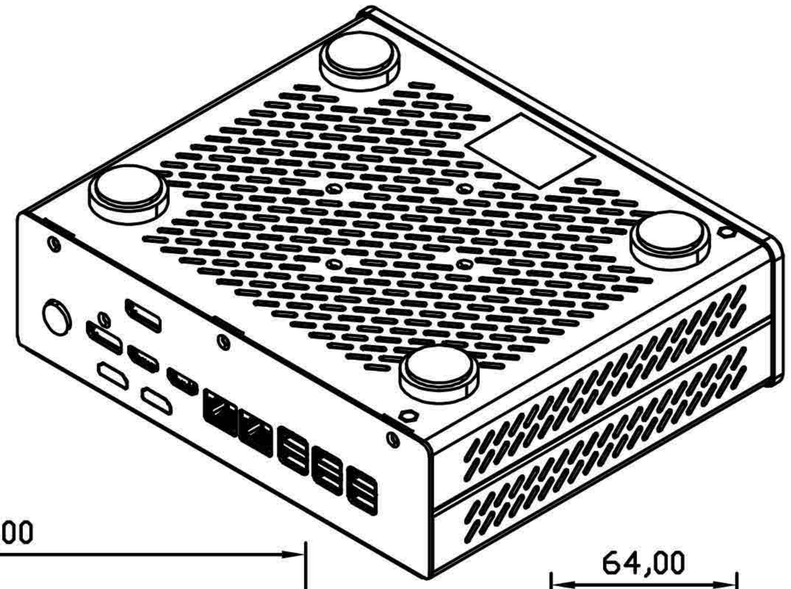

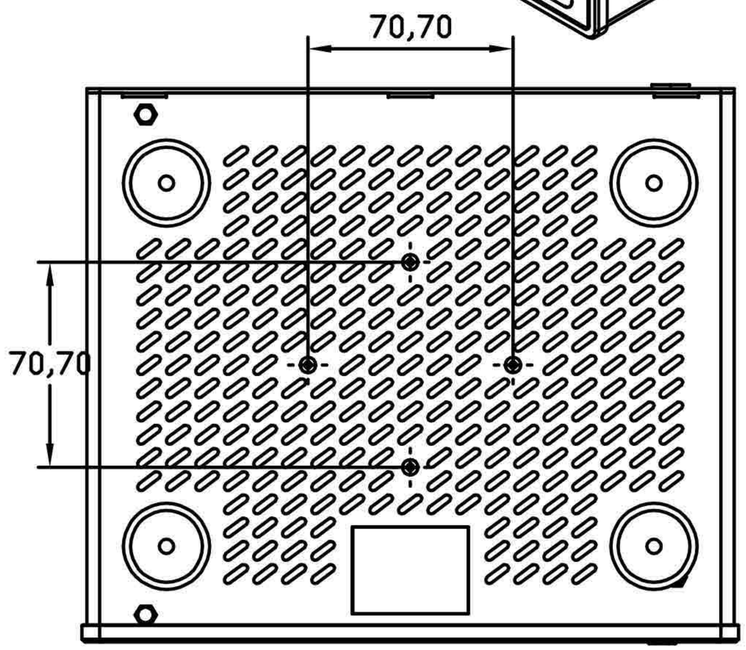

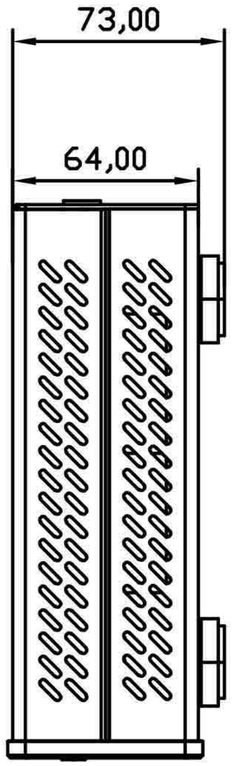

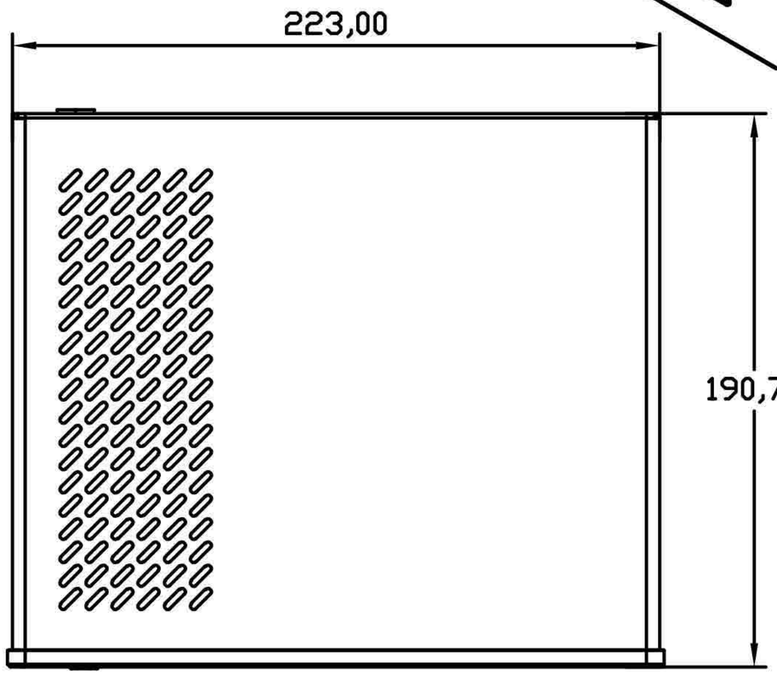

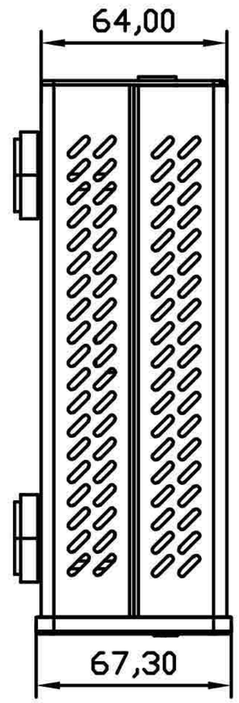

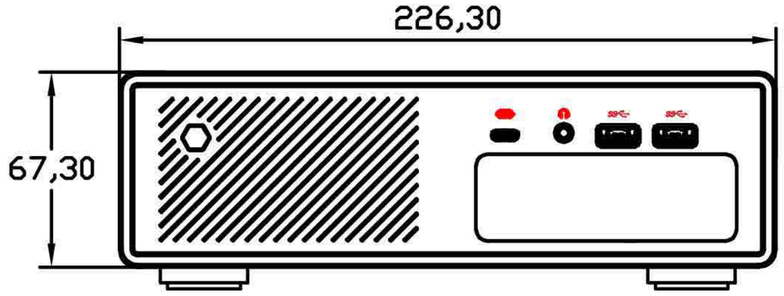

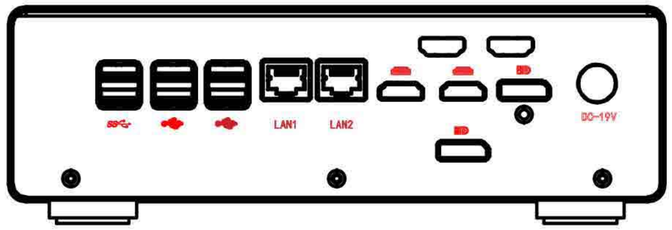

For more information, please contact your HYSTOU sales representative or send us an email : sales@hystou.com. Tech Support Blog: https://minipcsupport.com/